maskin mekano

CH180-PS

CONE CRUSHER UNIT

The advantages of stationary & mobile crushing combined in one single unit

The ambition of the new modular concept from Maskin Mekano is to combine the best of stationary crushing and screening plants with the versatility of mobile plants. In production, these machine units for crushing, screening and feeding on their high jacking legs resemble stationary plants while being very easy to move between different worksites.

Maskin Mekano's program of modular machines is characterized by

- Electric drive
- Interlocking control systems and emergency stop loops
- User-friendly and operator safe design
- Easy and safe to set up
- No removal of machine parts before transport
- Loading and unloading without lifting assistance
- Transport width <3.0 m (9.8'), i.e. no need for an escort car

CRUSHER	WEIGHT	TRANSPORT	CONSUMPTION
Cone	43.000	Traileroptimized	250 kW

SH 1503
maskin mekano

maskin mekano

The concept

CH180-PS is part of Maskin Mekano's new modular range. The machine is a conveyor in/conveyor out unit with a pre screen and an on-board return conveyor that makes it compatible with Maskin Mekano's final screen SH 1503 for closed circuit.

The material flow

The CH180-PS is equipped with Sandvik's cone crusher CH440. Before entering the crusher the material is fed unto a pre screen and further via a swivel on-board conveyor to remove the zerosize material or via by-pass to the conveyor under the crusher. The crushed material is loaded to the docked screen SH 1503 and the return is handled with an on-board swivel conveyor.

The crusher

Sandvik CH440 is suitable for a high-capacity secondary application or a high-reduction tertiary or pebble-crushing application, and it can be matched to changes in production through the selection of crushing chambers and an eccentric throw. This flexibility means that it's suitable for a wide range of applications.

Sandvik CH440 is highly versatile and reliable, and is designed to be easily serviced so that you can maximize the uptime of the equipment. The Automatic Setting Regulation control system (ASRi™) enables real-time performance management, giving you a machine that consistently runs at optimum levels. Achieve optimal performance by selecting the Sandvik crushing chamber that's right for your application.

Sandvik HYDROCONE™ enables you to run your crusher at maximum performance levels under changing feed conditions without overloading the crusher. Together with our automatic control system you will have a crusher which safely maximizes operational uptime.
Sandvik Hydroset system also helps keep your crusher up and running. With an automatic overload protection system as standard, Sandvik CH440 is protected against uncrushable material. The near-vertical profile of the feed opening area means that the shape of the chamber remains virtually unchanged throughout the wearing life.

The crusher adapts to variations in feed conditions automatically via the ASRi. By continuously measuring and compensating for crusher liner wear, the automation system allows you to fully utilize crusher liners and schedule liner replacements to coincide with planned maintenance stops. It also assists in keeping your crusher choke fed. This maximizes rock-on-rock crushing, which helps to optimize the quality of your final product.

All service and inspection is carried out from above, which makes the work easier and the maintenance costs lower. Robust sealing to the inner crusher mechanics provides more effective protection against dust and other unwanted particles – reducing maintenance and increasing the life of the crusher.

User-friendly and safe

It is easy to access all service and maintenance points on the CH180-PS. The catwalks are sturdy and extensive. When changing the mantels, the feeding conveyor is hydraulically folded. The conveyor under the crusher can be folded away too, to create maximum availability for service and maintenance.

The zerosize conveyor and the return conveyor are swivelling to eliminate the safety risks otherwise associated with heavy lifting when setting up and de-mounting the plant.

Transport

The CH180-PS is transported on a jumbo trailer or machine trailer. It can be loaded completely without any lifting help because the trailer can be reversed in between the machine's jacking legs. After the machine is lowered onto the trailer, the legs are folded and 3.0 meters width is not exceeded. The transport therefore does not require an escort car.

The hydraulic unit has a battery pack and 24-V system which means that loading and unloading can be carried out without power from the mains or generator.

Control system

The control cabinet is equipped with an industry-adapted HMI with colour display for start and stop and display of Ampere and other vital operating parameters. There are two operating modes, manual and automatic. Interlocking forward and backward in the process, also internally with the other units in the application, is performed in this unit as well as integration of emergency stop loops.

Trailer optimised loading

1. Raise the unit

2. Reverse the trailer

3. Lower the unit

4. Raise the jacking legs

5. Fold the jacking legs

maskin mekano
CH440-P5
maski

Transport

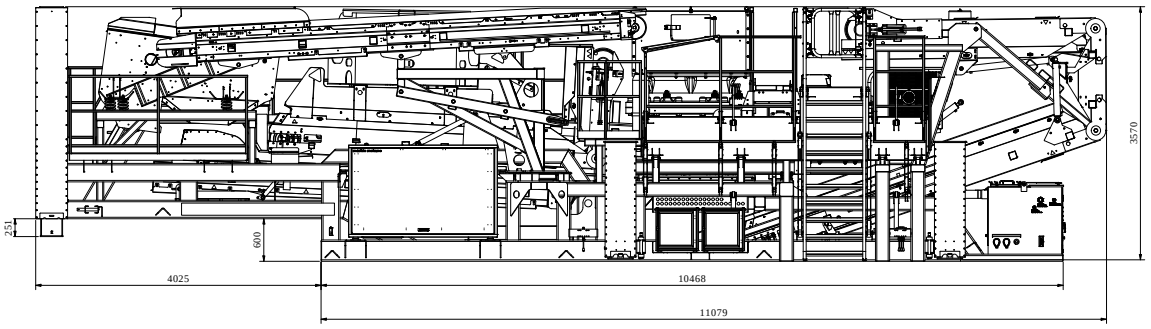

Production

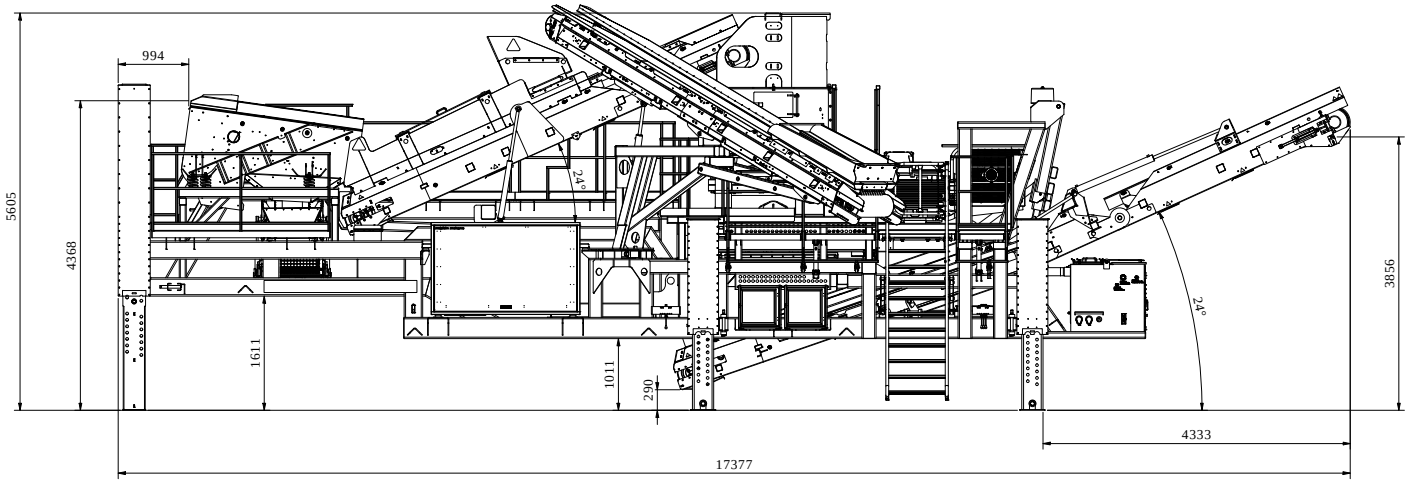

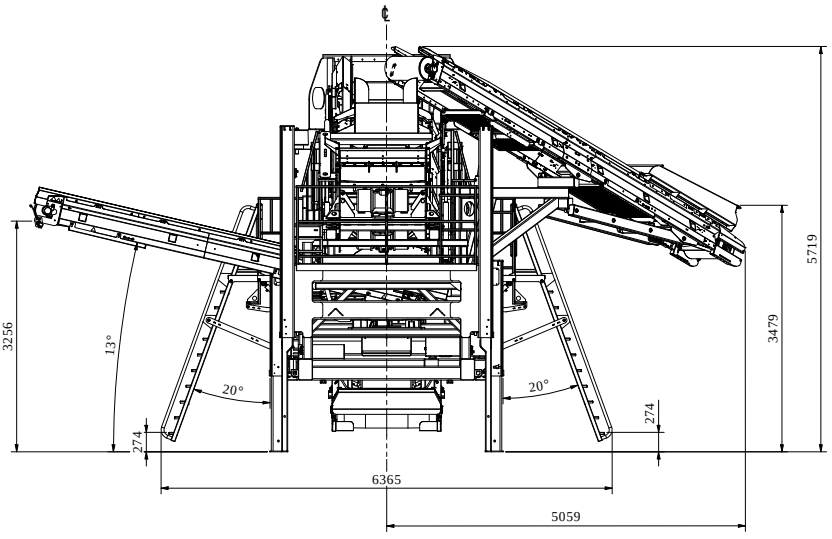

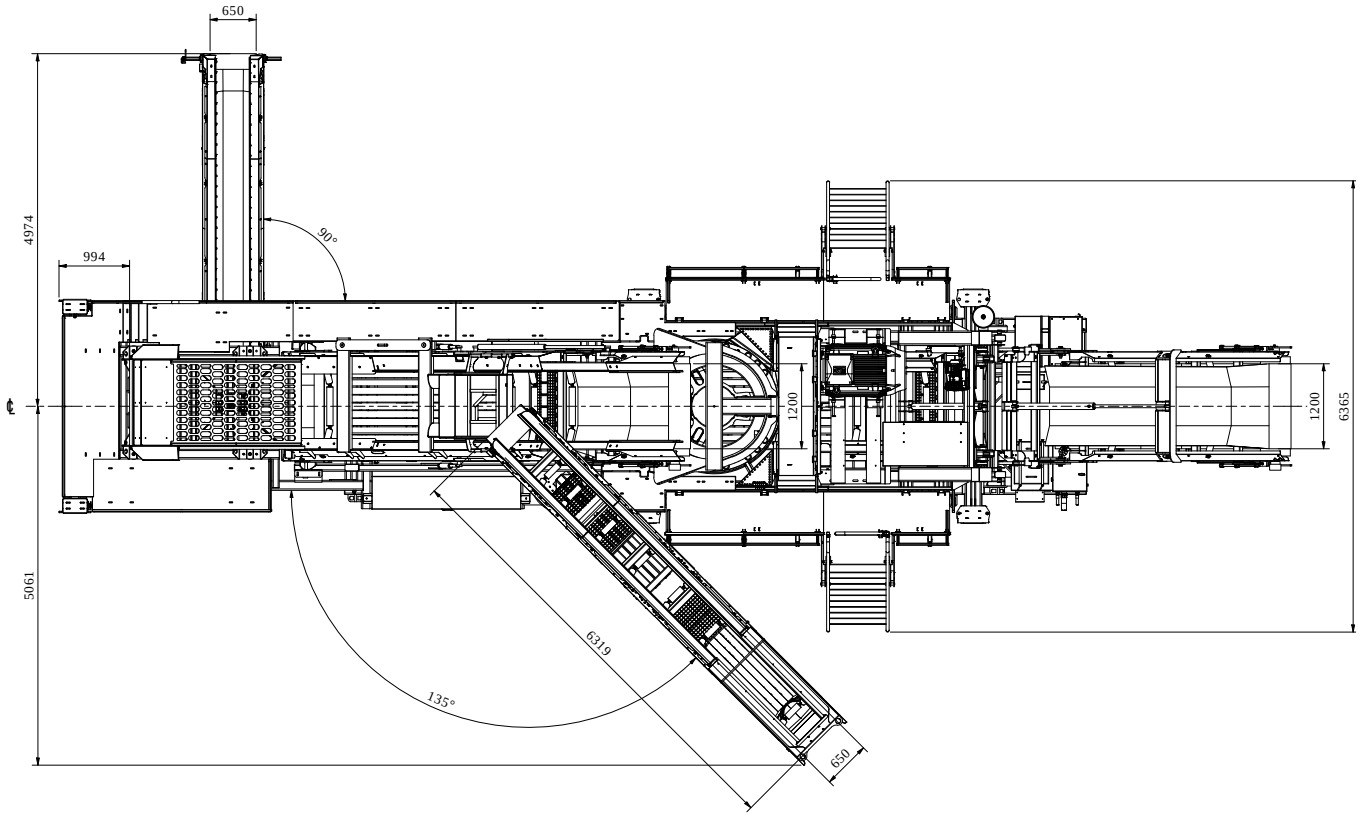
650
4974
994
90°
1200
1200
6365
5061
6319
135°
650

Bypassmode

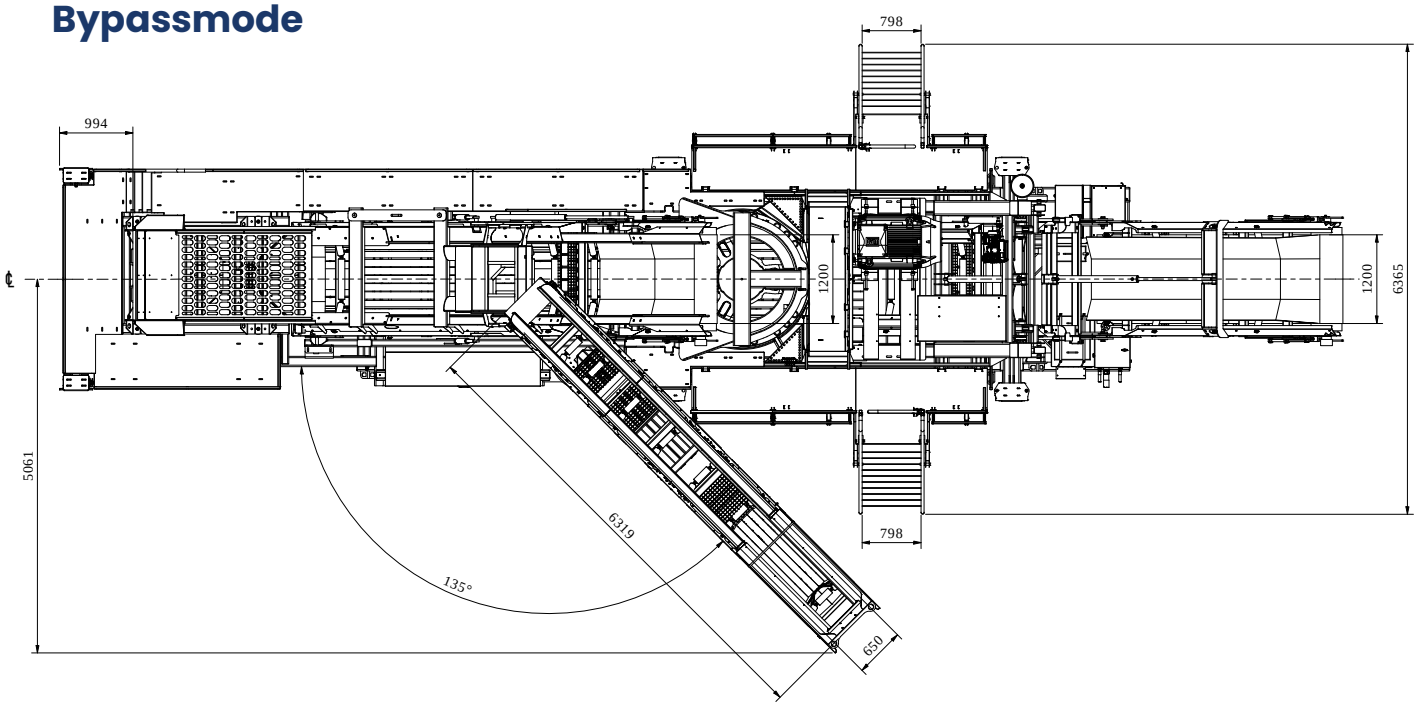
798
994
1200
1200
6365
5061
6319
135°
798
650

Technical Specification Maskin Mekano CH180-PS

Transport Length	14.2 m (46.6’)
Transport Width	3.0 m (9.8’)
Transport Height	3.6 m (11.8’)
Machine Weight	approx 43 tonnes, depending on equipment
Crusher	Sandvik CH440 Motor 220 kW
Prescreen	SFH 2-22 Screening surface 1.2 x 1.9 m (3.9 x 6.2’) on two decks Motor 2 x 3.2 kW
Feeding conveyor crusher	Belt width 1200 mm (3.9’) Length 5.1 m (16.7’) Electric drum motor 15 kW
Stockpiling conveyor fines material/Bypass	Belt width 650 mm (2.1’) Length 4.5 m (14.7’) Electric drum motorv 4 kW Discharge height 3.4 m (11.1’)
Stockpiling conveyor crushed material	Belt width 1200 mm (3.9’) Length 9.4 m (30.8’) Electric drum motor 15 kW Discharge height 3.7 m (12.1’)
Return conveyor	Belt width 650 mm (2.1’) Length 6.5 m (21.3’) Electric drum motor 4 kW Feed-in-height 3.35 m (11’)
Electric equipment	Distribution boxes mounted on chassis. Push button for sequence start 10” touch screen for starting of motors separately Emergency stops on chassis, conveyors and distribution box Speed monitors on all conveyors Monitored circuits for safety relay. Safety interlock Sandvik ASRi for surveillance and crusher settings
Hydraulic equipment	Hydraulic aggregate for set-up, folding of the conveyors and operator platforms Motor 4.0 kW
Wheel- and towing device	Chassis adapted for trailer transport Hydraulic jacking legs for elevation to production mode

Our policy is one of continuous improvement and we reserve the right to change the detailed specification of our products at any time without prior notice.

maskin mekano

Maskin Mekano AB, Box 9083, 550 09 Jönköping, SWEDEN,
+ 46 36 31 74 00
info@maskinmekano.se

www.maskinmekano.se